HAL
open science

Theoretical study of a self-sustained CMOS-integrated nano-oscillator

Grégory Arndt, Eric Colinet, Julien Arcamone, Jérôme Juillard

To cite this version:

Grégory Arndt, Eric Colinet, Julien Arcamone, Jérôme Juillard. Theoretical study of a self-sustained CMOS-integrated nano-oscillator. Smart Systems Integration (SMART SYS'10), Mar 2010, Como, Italy. CD-ROM Proceedings (5 p.). hal-00517345

HAL Id: hal-00517345

https://centralesupelec.hal.science/hal-00517345

Submitted on 14 Sep 2010

HAL is a multi-disciplinary open access archive for the deposit and dissemination of scientific research documents, whether they are published or not. The documents may come from teaching and research institutions in France or abroad, or from public or private research centers.

L'archive ouverte pluridisciplinaire **HAL**, est destinée au dépôt et à la diffusion de documents scientifiques de niveau recherche, publiés ou non, émanant des établissements d'enseignement et de recherche français ou étrangers, des laboratoires publics ou privés.

Theoretical study of a self-sustained CMOS-integrated nano-oscillator

Gregory Arndt, Eric Colinet, Julien Arcamone, CEA, LETI, MINATEC, F-38054 Grenoble, France
Jerome Juillard, Supelec, Dept.SSE, Gif-sur-Yvette, France

1 Introduction

Over the last ten years, the progress of Nanoelectromechanical systems (NEMS) fabrication has opened new possibilities for the use of NEMS as high-performance, low-cost, compact sensors [1]. In NEMS resonators-based sensors, the resonant frequency depends upon the physical parameter to be measured [2]. To track dynamically the time-varying resonant frequency of the NEMS, one approach consists in embedding the NEMS in a self-oscillating loop so that it oscillates at its resonant frequency. The resonator chosen in this study uses electrostatic actuation and capacitive detection. This has the advantage of having a relatively simple implementation and good transduction efficiency. Furthermore, this actuation/detection scheme makes possible the monolithical integration of the NEMS resonator with a dedicated CMOS circuit. Co-integrated sensors have higher signal-to-noise ratios since parasitic capacitances are drastically reduced. Examples of co-integrated NEMS resonators are presented in [3-5].
The main contribution of this work is the design of a NEMS/CMOS oscillator (NEMS as resonant element, CMOS circuit as sustaining amplifier) with a very simple amplifying circuit based on a single active transistor. The design of the electronics and the oscillator steady-state response are theoretically studied. The micro/nanomechanical resonator is described in section 2, the oscillation conditions and the CMOS sustaining amplifier are respectively analyzed in sections 3 and 4. Finally, the steady-state regime of the oscillator is determined by using a describing function method in section 5.

2 Description of the mechanical resonator

Figure 1 schemes the oscillator comprising a NEMS resonator and a CMOS circuit. The NEMS is a 3-port doubly-clamped beam resonator which converts the input voltage into a mechanical motion which is then detected and converted back into a voltage through a capacitive detection. F is the electrostatic force applied to the beam and y the resulting in-plane (transverse) motion of the beam. The purpose of the sustaining amplifier circuit is to amplify and to shift the phase of the NEMS output voltage so that oscillation builds up. The resonator has the following dimensions: 14.8μm long (l), 250nm wide (w) and 1μm thick (h). The expected quality factor (Q) of this device in vacuum is 1000. The resonating beam is polarized by a DC voltage (V_B). The gap (g) between the beam and each of the detection and actuation

electrodes is 250*nm*. According to these dimensions, the resonance of the fundamental in-plane flexural mode is approximately f_0=10*MHz*.

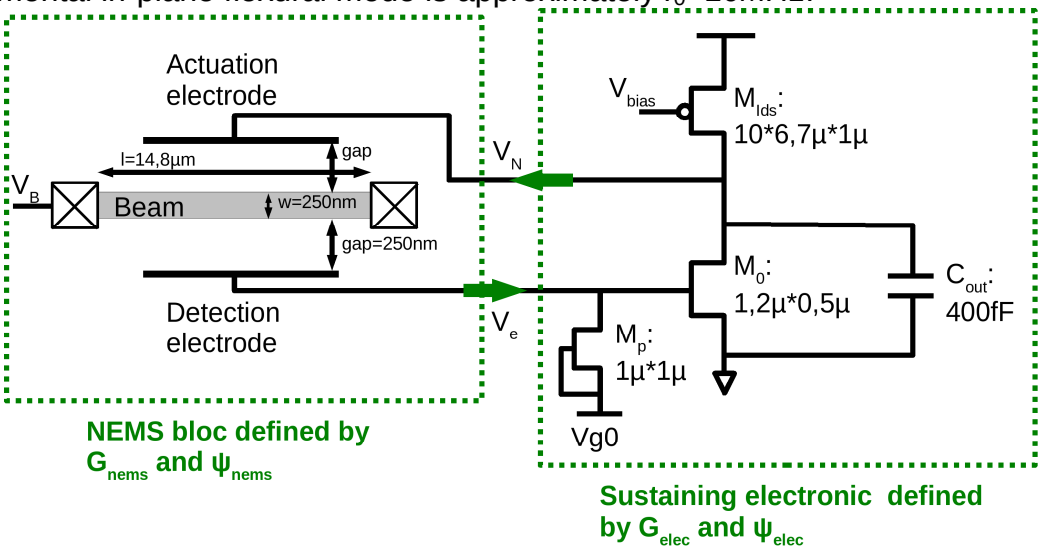

Figure 1: Oscillator schematic

The following notations are used: V_N is the voltage at the input of the NEMS and v_N is the AC component of V_N. V_e is the voltage at the input of the electronic circuit and v_e is the AC component of V_e. V_{DC}=11.5*V* is the DC component of V_B-V_N.
Assuming $v_N, v_e \ll V_{DC}$, $y \ll g$ and the DC component of V_N and V_e are equal, the transduction behavior of the mechanical beam can be approximated to:

$$m\ddot{y} + c\dot{y} + (k - k_e)y = -\frac{C_0 V_{DC}}{g}(v_e - v_N), \tag{1}$$

where *m* is the effective mass, *k* and k_e are respectively the mechanical and electrostatic stiffness, *c* the dissipation coefficient ($c = \sqrt{km}/Q$) and $C_0 = \varepsilon_0 hl/g$.
Assuming that the input of the electronic feedback circuit is mostly capacitive, the output voltage of the NEMS v_e can be calculated through (here $y \ll g$): $v_e = -V_{DC}\eta_D \frac{C_0}{C_{in}}\frac{y}{g}$ where C_{in} is the total capacitance (mainly parasitic) at the NEMS output (i.e. at the circuit input) and $\eta_D \approx 0.52$ is a parameter depending on the mechanical mode excited. The transfer function of the NEMS (H_{NEMS}) has the following expression:

$$H_{nems} = \frac{v_e}{v_n} = \frac{(C_0 V_{DC}/g)^2 \eta_D}{(k - k_e)C_{in} + (C_0 V_{DC}/g)^2} \frac{1}{1 + jf/(Qf_0) - (f/f_0)^2}. \tag{2}$$

The NEMS behaves as a bandpass filter with a high quality factor. Therefore at the fundamental frequency, the gain is maximum and the phase delay between the input voltage and the NEMS output voltage is equal to -π/2. The NEMS gain and phase at the resonance frequency (f=f_0) are:

$$\|H_{nems}(j\omega_0)\| = g_{nems} \approx 0.93 \text{ and } angle(H_{nems}(j\omega_0)) = \psi_{nems} = -\pi/2 \tag{3}$$

In a properly designed system, the beam should oscillate at a frequency close to f_0. To determine with accuracy the oscillator behavior close to its working frequency, one can compute the Taylor expansion of H_{nems} when *f* is close to f_0. This yields:

$$G_{nems} \approx -g_{nems}\left(1-2Q^2\frac{(f-f_0)^2}{{f_0}^2}\right),\ \psi_{nems} = -\pi/2 - 2Q\frac{f-f_0}{f_0}, \tag{4}$$

where $G_{nems}(f)$ and $\Psi_{nems}(f)$ are the amplitude and phase responses of the NEMS. Equation (4) lead to:

$$G_{nems} = g_{nems}\left[1-\frac{(\pi/2+\psi_{nems})^2}{2}\right] \tag{5}$$

Note that, because of the large value of Q, Ψ_{nems} can be fairly different from -π/2 and f still very close to f_0.
We will now discuss the resulting implications on the design rules of the electronic circuit in order to build up the oscillations.

3 Oscillation condition

To determine the oscillation conditions of a closed-loop system, one must consider the open loop transfer function H_{OL} of the NEMS and its electronics. H_{OL} is the product of the transfer function of the NEMS and that of the sustaining electronic H_{elec}. According to the Barkhausen criterion, oscillations start building up when

$$\mathrm{Re}(\mathrm{H}_{\mathrm{nems}} \times H_{elec}) > 1 \text{ and } \mathrm{Im}(\mathrm{H}_{\mathrm{nems}} \times H_{elec}) = 0, \tag{6}$$

and stabilize when:

$$\mathrm{H}_{\mathrm{nems}} \times H_{elec} = 1. \tag{7}$$

The electronic feedback circuit must amplify and shift the phase of v_e in order to satisfy the Barkausen criterion. From (2) and (3), H_{elec} must have a gain superior to $1/g_{nems}$ and a phase of ψ_{elec}=π/2 to ensure oscillation at f_0. Once the oscillation builds up, its amplitude must be somehow controlled otherwise when the amplitude reaches the pull-in threshold, the beam can collapse by sticking. One possible approach consists in dynamically adapting the electronic gain through an automatic gain control (AGC) so that $H_{nems}H_{elec}$=1. In our approach, the intrinsic nonlinearities of the electronic circuit are used to stabilize the oscillation without the need of an AGC. However, this approach requires special attention in the design of the electronics to ensure the functionality of the whole system.

4 Implementation, design of the feedback loop

The aim of the electronic circuit is to amplify and phase-shift the circuit input voltage (v_e). As shown in section 3, the phase-shift between v_N and v_e must be of π/2 and the gain of the circuit $G_{elec} > \frac{1}{g_{nems}} = \frac{1}{0.93}$. This can be achieved with the schematic shown in figure 1 [6]. The input voltage v_e is applied on the gate of the transistor M_0 and converted into a current which flows into the output capacitor (C_{out}); this scheme-shifts the phase of the output voltage v_N. The transistors M_P and M_l act respectively as a current source and a resistance that polarize the transistor M_0. M_{lds} is polarized by an external DC voltage. The admittances of M_P and M_{lds} are respectively $1/(g_{dsP}+g_{mP})$ (active charge configuration) and $1/g_{dsl}$ (current source configuration).
To achieve a capacitive-input electronic circuit, as assumed in section 2, the admittance of M_P must be negligible compared to the input capacitance C_{in} of the circuit (mainly parasitic). For the motional current to flow into C_{out}, the drain-source admittances of M_{lds} (g_{dsl}) and M_0 (g_{ds0}) must be negligible compared to the equivalent

admittance of C_{out}. Finally the gate-drain capacitance C_{gd0} of M_0 must be small compared to C_{in}. These conditions sum up to:

$$g_{dsP} + g_{gP} << 2\pi f_0 C_{in}\,, \qquad g_{ds0} + g_{dsI} << 2\pi f_0 C_{out} \text{ and } \qquad C_{gd0} << C_{in}\,. \tag{8}$$

A trade-off must be found on the value of C_{out} in order to obtain a high gain while keeping its equivalent admittance larger than g_{Ids}. The transistors dimensions must be optimized to fulfill (8). The polarization voltage of M_{Ids} can be set to ensure that the gate and drain DC voltages of M_0 are equal while keeping the transistors in the saturation regime: this ensures that the DC component of V_N and V_e are equal (what does not statically deflect the beam since equal dc voltages are applied on each side of the beam).

Finally the dimensions of the transistor M_P must be set in order to obtain low g_{dsP} and g_{mP} values. With C_{in} typically in the order of 10*pF*, simulations show that the following values:

$$g_{m0} = 36\mu S\,,\ g_{ds0} = 0.5\mu S\,,\ C_{gd0} = 160\,fF\,,\ g_{dsI} = 0.1\mu S\,,\ g_{dsP} = 0.3\mu S \text{ and } C_{out} = 400\,fF\,, \tag{7}$$

obey to the constraints imposed by (8). According to these values and assuming $f \approx f_0$, the small-signal electronic gain and phase are G_{elec}=1.15, Ψ_{elec}=92°. Oscillations in the system therefore build up. In the next section, we will determine the characteristics of the steady-state regime.

5 Amplitude of stabilized oscillations

Using the describing function method [7], we have analyzed the theoretical circuit response $v_N=f(v_e)$ for a large input voltages range at a specific frequency, i.e. the NEMS fundamental frequency f_0, by performing transient simulations. The Fourier coefficient of this signal at the fundamental frequency f_0 is then calculated in order to obtain the gain and the phase of the output signal.

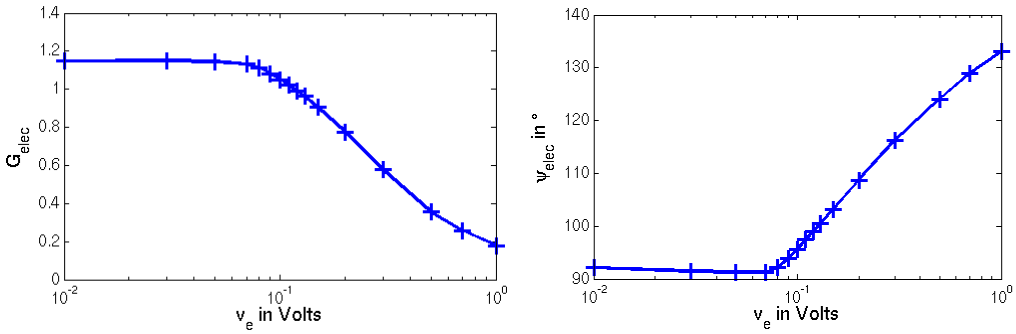

Figure 2: Evolution of (a) G_{elec} and (b) Ψ_{elec} versus v_e.

The circuit response is depicted in terms of voltage gain (v_N/v_e) and phase in Figure 2. The transfer function $H_{elec}(v_e, j2\pi f_0)$ is therefore described. It shows that the electronic circuit has a linear behavior when v_e is lower than 30*mV*. For higher values, the circuit gain decreases and its phase increases. Whereas the total loop gain of the oscillator is higher than one in the linear part of the response, a gain strictly equal to one can be obtained in the nonlinear saturated part. Knowing $g_{nems}(v_e)$ and $\Psi_{elec}(v_e)$ and using (8), one may then plot G_{elec} and $1/G_{nems}$ versus v_e using the fact that, in the steady state, $\Psi_{nems}(f)$ should be equal to $-\psi_{elec}(v_e)$. The existence of a steady state regime can then be determined from the intersection of

$G_{elec}(v_e)$ and $1/G_{nems}(v_e)$ (figure 3). The intersection corresponds to a stable displacement amplitude of the beam of about 80*nm* (which is far from the pull-in threshold) and an electronic output voltage amplitude of about 90*mV*.
This technique is a fairly simple method to evaluate the stabilized amplitude of NEMS oscillators. However in this study, the Duffing effect and the electrostatic nonlinearity have been neglected in this study as we have assumed that $y<<g$. These assumptions can lead to an error up to 25% on the NEMS transfer function.

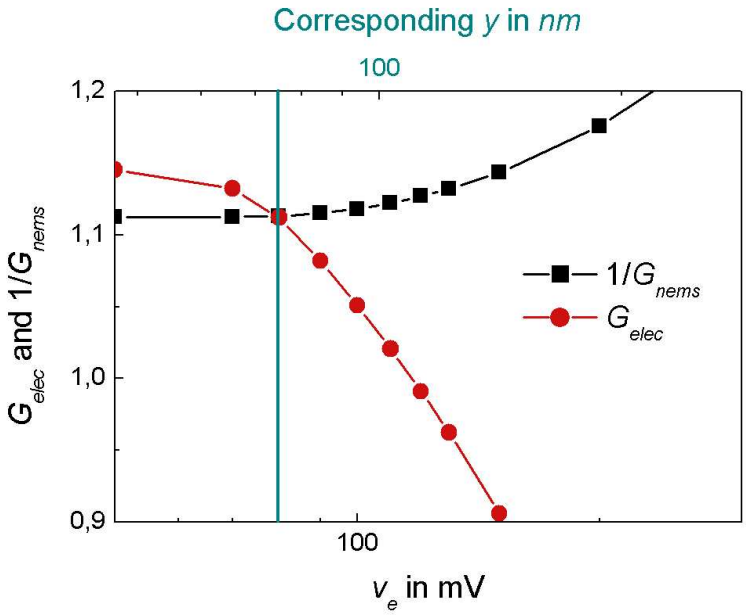

Figure 3: Evolution of G_{elec} and $1/G_{nems}$ versus v_e at $\Psi_{nems}(f)=\Psi_{elec}$.

6 Conclusion

In this paper, the theoretical study of an ultra-compact NEMS/CMOS oscillator is presented. The oscillation conditions are calculated based on (i) the electromechanical modeling of the nano-mechanical resonator and (ii) on the behavior of a dedicated CMOS sustaining amplifier circuit designed for this purpose. After briefly analyzing this electronic circuit design, this paper focuses on the study of the saturation mechanisms of the mechanical oscillations to avoid pull-in effect. This has been done using the “describing function” method applied to the CMOS circuit..

[1] M. Gad-el-Hak, The MEMS Handbook, 2nd ed. Boca Raton, FL: CRC, 2005.
[2] J.D. Taylor et al, in Frontiers in Nanoscience and Nanotechnology,Eds. Anant Narlikar and Yunyi Fu, Oxford University Press (submitted).
[3] O. Brand, Proceedings IEEE, vol. 94, no. 7, pp. 1160-1176, Jul. 2006
[4] J. Verd, et al, J. Microelectromech. Syst., vol. 14, p. 508, Jun. 2006.
[5] J. Arcamone, et al, Nanotechnology, vol. 19, 305302, Jul. 2008
[6] E. Colinet, et al, Journal of Applied Physics, vol. 105, no. 12, pp 124908-8, 2009
[7] A. Gelb, et al, Mcgraw-Hill, New-York, 1968.